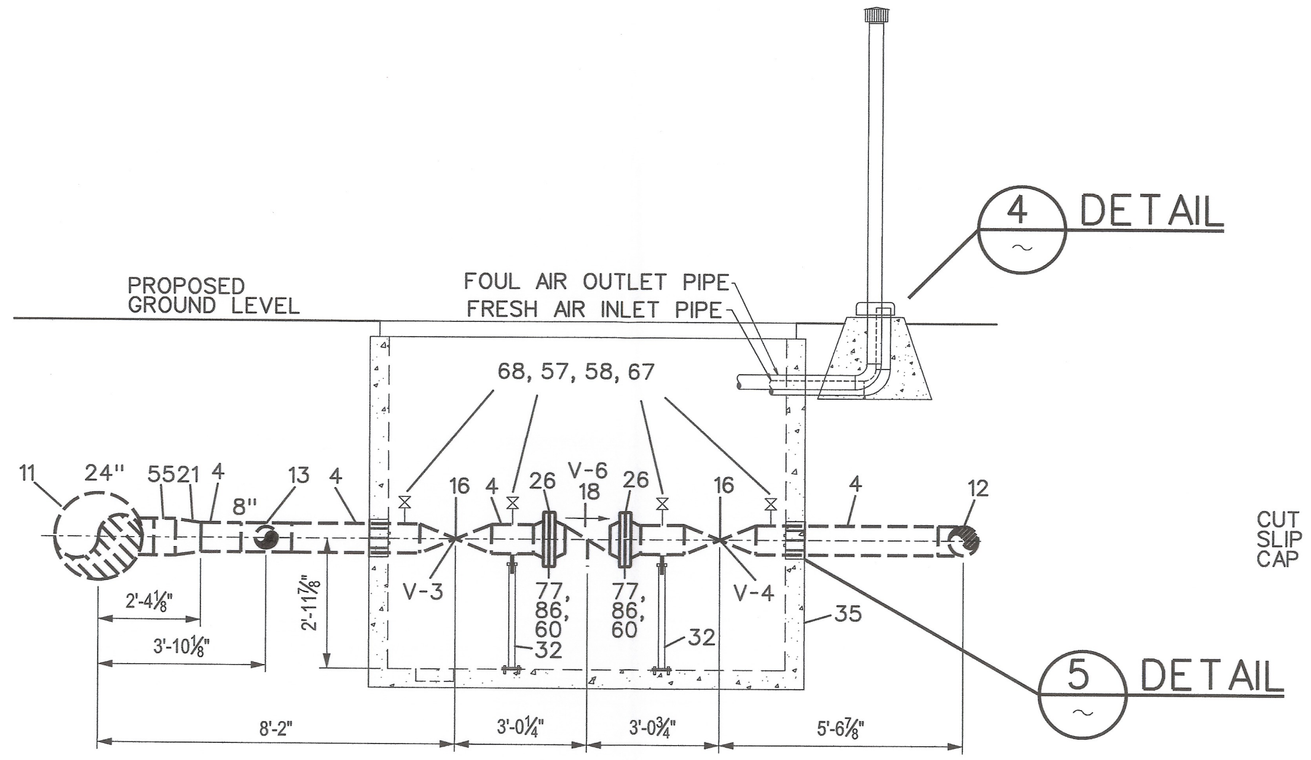

ELEVATION B/4
SCALE: 3/8"=1'

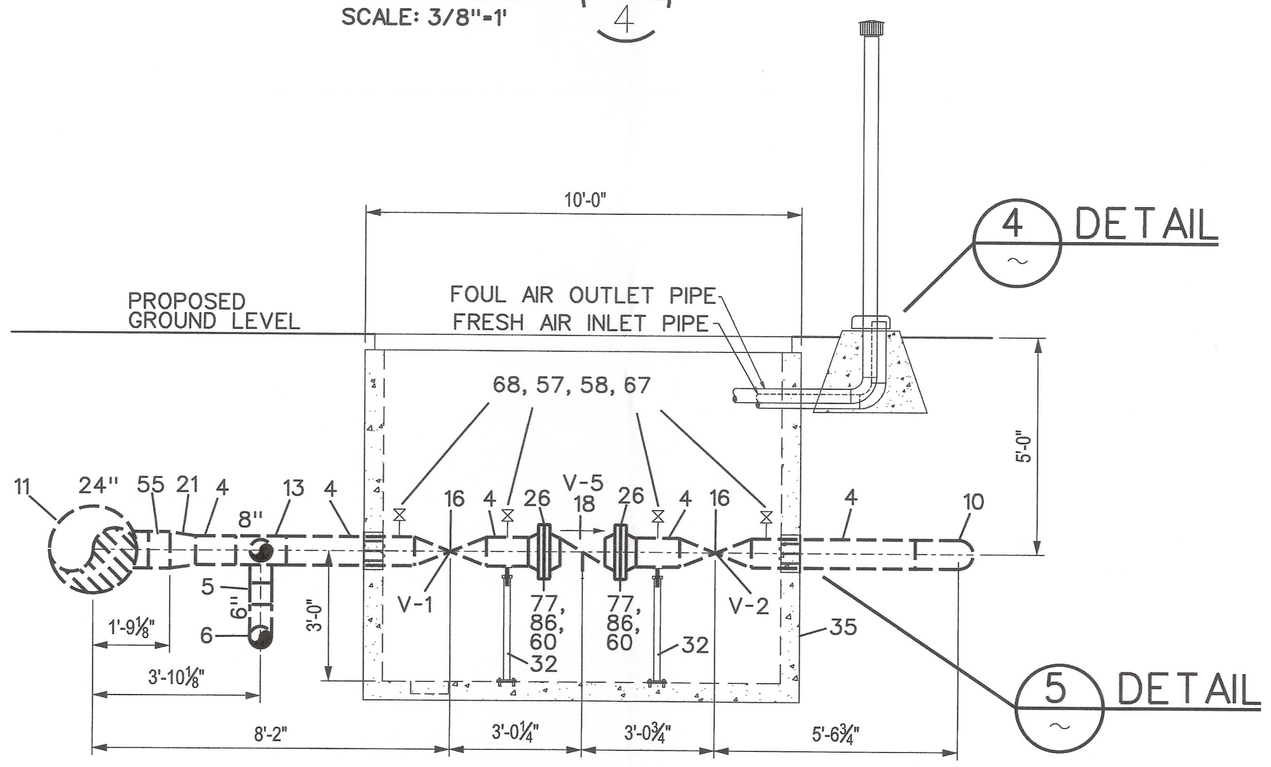

ELEVATION C/4
SCALE: 3/8"=1'

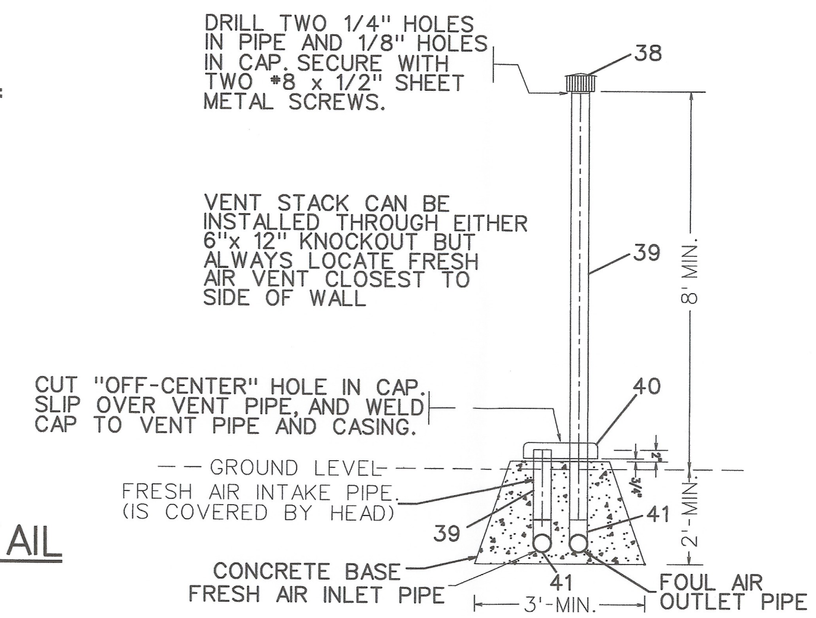

PER GS&S K-20

VENT DETAIL 4
(NOT TO SCALE)

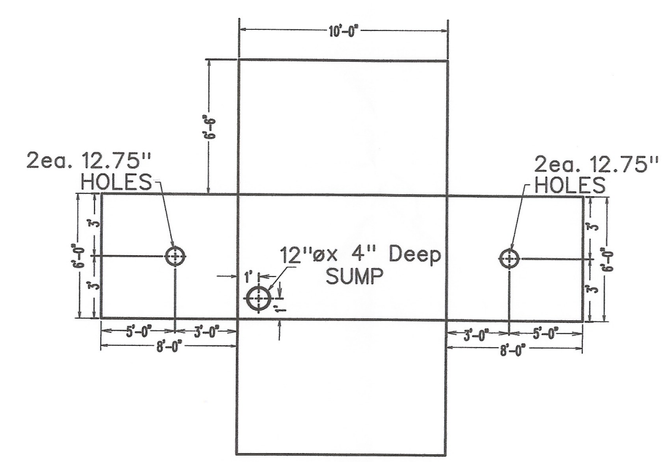

VAULT LAYOUT VIEW
BILL OF MATERIAL ITEM #35

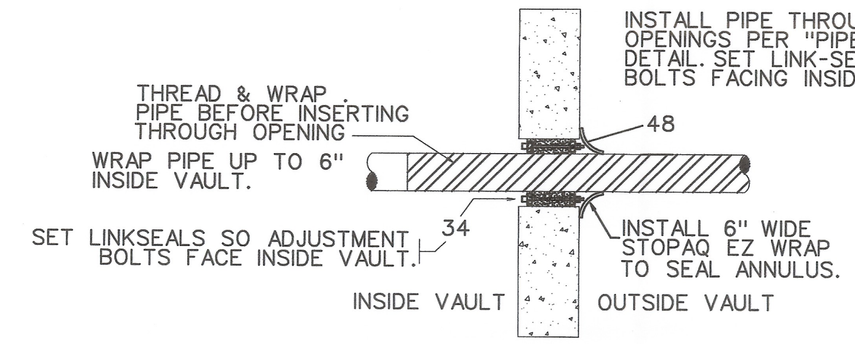

PIPE PENETRATION DETAIL 5
(NOT TO SCALE)

WELDING INSPECTED PER PG&E GAS STANDARD D-40
VISUAL ☐
MAGNETIC PARTICLE ☐
INSPECTOR
DATE

PS-1201629

SAFETY
SAFETY PLEDGE
I ALWAYS PUT SAFETY FIRST.
I LOOK FOR AND ACT TO RESOLVE UNSAFE SITUATIONS.
I HELP AND ENCOURAGE OTHERS TO ACT SAFELY.

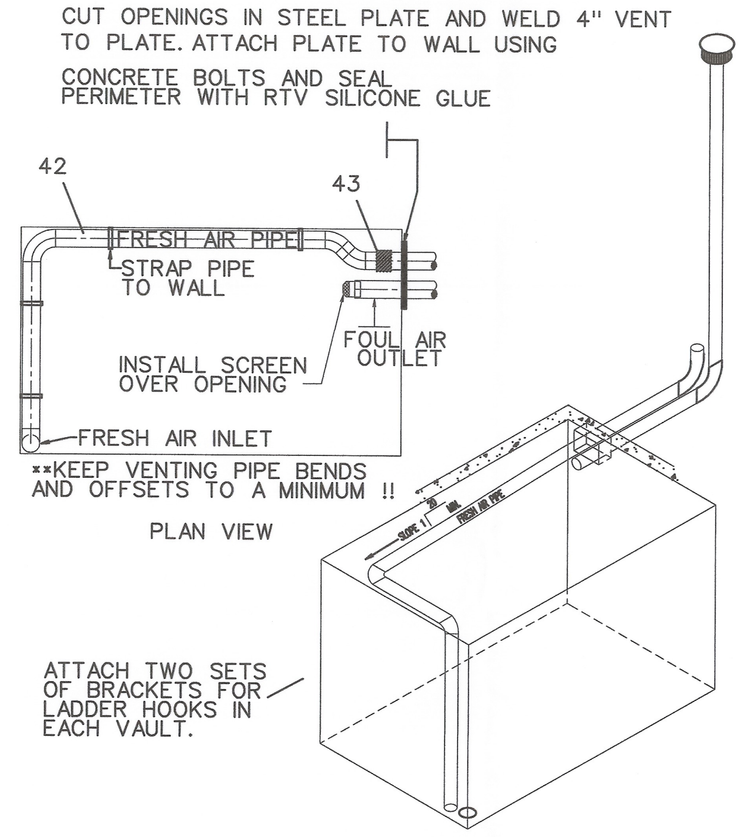

PER GS&S H-14
VAULT VENTING DETAIL: (BOTH VAULTS)
(NOT TO SCALE)

NOTE: SOIL UNDER THE VAULT SHALL BE COMPACTED TO A MINIMUM RELATIVE DENSITY OF 95% OF MAXIMUM DENSITY. SOFT MATERIAL IN ORIGINAL GROUND THAT WILL NOT COMPACT TO THIS MINIMUM SHALL BE REMOVED AND REPLACED WITH SUITABLE COMPACTIBLE MATERIAL. BACKFILL SHALL BE PLACED IN LAYERS NOT TO EXCEED 8" IN THICKNESS BEFORE COMPACTION.

STPR TEST #1
MAIN LINE VALVE
CHECK VALVE

JOB NO. 30919862
B/M ITEM NO. 55
DESIGN CRITERIA
LOCATION CLASS 3
DESIGN FACTOR 0.5
FDP 720 PSIG 30.29 % SMYS
MAOP 720 PSIG 30.29 % SMYS
STRENGTH TEST PRESSURE
MAX. 1125 PSIG 47.33 % SMYS
MIN. 1080 PSIG 45.44 % SMYS
2139 PSIG-90% SMYS
TEST MEDIUM WATER
PIPE SPEC API 5L GR.B SMLS
O.D. 10.750
W.T. 0.365"
WELD INSPECTION (GAS STD.D-40)*
☐RADIOGRAPHIC:
☐20% MIN. (% OF EACH WELDER'S DAILY WORK)
☐100% DAILY WORK)
*VISUALLY INSPECT 100% OF ALL WELDS THAT ARE NOT RADIOGRAPHICALLY INSPECTED. (THIS REQUIREMENT APPLIES EVEN IF NO RADIOGRAPHIC INSPECTION IS REQUIRED.)

JOB NO. 30919862
B/M ITEM NO. 4
DESIGN CRITERIA
LOCATION CLASS 3
DESIGN FACTOR 0.5
FDP 720 PSIG 27.55 % SMYS
MAOP 720 PSIG 27.55 % SMYS
STRENGTH TEST PRESSURE
MAX. 1125 PSIG 43.05 % SMYS
MIN. 1080 PSIG 41.33 % SMYS
2352 PSIG-90% SMYS
TEST MEDIUM WATER
PIPE SPEC API 5L GR.B SMLS
O.D. 8.625"
W.T. 0.322"
WELD INSPECTION (GAS STD.D-40)*
☐RADIOGRAPHIC:
☐20% MIN. (% OF EACH WELDER'S DAILY WORK)
☐100% DAILY WORK)
*VISUALLY INSPECT 100% OF ALL WELDS THAT ARE NOT RADIOGRAPHICALLY INSPECTED. (THIS REQUIREMENT APPLIES EVEN IF NO RADIOGRAPHIC INSPECTION IS REQUIRED.)

JOB NO. 30919862
B/M ITEM NO. 3
DESIGN CRITERIA
LOCATION CLASS 3
DESIGN FACTOR 0.5
FDP 720 PSIG 24.34 % SMYS
MAOP 720 PSIG 24.34 % SMYS
STRENGTH TEST PRESSURE
MAX. 1125 PSIG 38.03 % SMYS
MIN. 1080 PSIG 36.51 % SMYS
2682 PSIG-90% SMYS
TEST MEDIUM WATER
PIPE SPEC API 5L GR.B SMLS
O.D. 6.625"
W.T. 0.280"
WELD INSPECTION (GAS STD.D-40)*
☐RADIOGRAPHIC:
☐20% MIN. (% OF EACH WELDER'S DAILY WORK)
☐100% DAILY WORK)
*VISUALLY INSPECT 100% OF ALL WELDS THAT ARE NOT RADIOGRAPHICALLY INSPECTED. (THIS REQUIREMENT APPLIES EVEN IF NO RADIOGRAPHIC INSPECTION IS REQUIRED.)

MANUALLY OPERATED VALVE DATA STAMP	MANUALLY OPERATED VALVE DATA STAMP	MANUALLY OPERATED VALVE DATA STAMP	MANUALLY OPERATED VALVE DATA STAMP	MANUALLY OPERATED VALVE DATA STAMP	MANUALLY OPERATED VALVE DATA STAMP
BOM* 16	BOM* 16	BOM* 16	BOM* 16	BOM* X	BOM* X
TECH ID (VALVE *) 1	TECH ID (VALVE *) 2	TECH ID (VALVE *) 3	TECH ID (VALVE *) 4	TECH ID (VALVE *) 5	TECH ID (VALVE *) 6
VALVE TYPE 8" BALL	VALVE TYPE 8" BALL	VALVE TYPE 8" BALL	VALVE TYPE 8" BALL	VALVE TYPE 8" CHECK	VALVE TYPE 8" CHECK
MANUFACTURE	MANUFACTURE	MANUFACTURE	MANUFACTURE	MANUFACTURE	MANUFACTURE
MODEL *	MODEL *	MODEL *	MODEL *	MODEL *	MODEL *
SERIAL*	SERIAL*	SERIAL*	SERIAL*	SERIAL*	SERIAL*
COMMISSIONING	COMMISSIONING	COMMISSIONING	COMMISSIONING	COMMISSIONING	COMMISSIONING
VALVE TO BE COMMISSIONED BY GAS T&R OR DISTRICT PRIOR TO ANYTHING BEING WELDED OR BOLTED TO THE VALVE ASSEMBLY	VALVE TO BE COMMISSIONED BY GAS T&R OR DISTRICT PRIOR TO ANYTHING BEING WELDED OR BOLTED TO THE VALVE ASSEMBLY	VALVE TO BE COMMISSIONED BY GAS T&R OR DISTRICT PRIOR TO ANYTHING BEING WELDED OR BOLTED TO THE VALVE ASSEMBLY	VALVE TO BE COMMISSIONED BY GAS T&R OR DISTRICT PRIOR TO ANYTHING BEING WELDED OR BOLTED TO THE VALVE ASSEMBLY	VALVE TO BE COMMISSIONED BY GAS T&R OR DISTRICT PRIOR TO ANYTHING BEING WELDED OR BOLTED TO THE VALVE ASSEMBLY	VALVE TO BE COMMISSIONED BY GAS T&R OR DISTRICT PRIOR TO ANYTHING BEING WELDED OR BOLTED TO THE VALVE ASSEMBLY
COMMISSIONED BY	COMMISSIONED BY	COMMISSIONED BY	COMMISSIONED BY	COMMISSIONED BY	COMMISSIONED BY
DATE	DATE	DATE	DATE	DATE	DATE
NUMBER OF TURNS	NUMBER OF TURNS	NUMBER OF TURNS	NUMBER OF TURNS	NUMBER OF TURNS	NUMBER OF TURNS

REGISTERED PROFESSIONAL ENGINEER GEORGE TASSO KARAZIS No. M27357 EXP. MECHANICAL STATE OF CALIFORNIA

PSRS* 27156

NO.	DATE	DESCRIPTION	GM/SPEC	DWN	CHKD	SUPV	APVD BY
0	- -	ISSUE FOR CONSTRUCTION	30919862	D5BZ	SEW6		
	- -						

REVISIONS

APPROVED BY
JN 30919862
SUPV
DSGN D. BREWER
DWN D. BREWER
CHKD S. WATERS
OK
DATE 05/30/12
SCALES AS SHOWN

PIPING - SECTIONS & DETAILS
INSTALL MLV 38.17 AND BRIDLE SET ON L-108 AND 385' OF 8" PIPE TO DFM 1616-01.
LODI, SAN JOAQUIN COUNTY
PACIFIC GAS AND ELECTRIC COMPANY
WALNUT CREEK, CALIFORNIA

MICROFILM
BILL OF MATL SHT 10
DWG LIST
SUPSDS
SUPSD BY
SHEET NO. 7 OF 10 SHEETS
30919862 0

30919862-FINAL.dgn 7/11/2012 3:11:50 PM